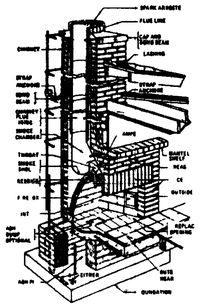

PAR OF F EPLACE AND CH MNEY

RESIDENTIAL FIREPLACE AND CHIMNEY CONSTRUCTION DETAILS AND SPECIFICATIONS

Date _____

Tract No. or Job Location _____

Name Address-Owner _____

Name & Address-Contractor _____

MENS ONS

Dimensions shall be not less than listed in table of General Code Requirements

Width of Opening _____ Height of Opening _____

Depth _____ Size of Flue _____

Width of Jambs Each Side of Opening _____

Height Top of Foundation to Top of Chimney _____

Ash Dump Clean-out Fittings Required Yes _____ No _____

Special Items modifications applying to this Job.

_____

_____

SPEC FICATIONS

Scope
The following specifications, including special items and mass fireplaces, shall govern the construction of the fireplace and chimney

Work Not Included
Any concrete work furnishing the required vertical reinforcing steel furnishing or placing vertical steel dowels in the footing.

Work Included
All labor materials, equipment appliances, anchors, bolts, miscellaneous iron work and all other reinforcing steel, including setting of vertical steel as indicated on the plans and as herein specified.

Materials
Materials shall be as follows;
Water shall be clean and potable
Steel reinforcing to *"Aggregate for Masonry Mortar* ASTM C 144.
Portland cement conforming to ASTM S5.
Lime putty made of high calcium lime and aged to insure complete slaking.
Hydrated lime conforming to *"Hydrated Lime for Masonry Purposes."* ASTM 207 Type S
Steel reinforcing conforming to *Deformed Billet Steel Bars Concrete Reinforcement* ASTM Grade 40
Brick meeting the requirements for *"Building Brick* ASTM 62
Block meeting the requirements for *Hollow and Bearing Concrete Masonry Units* ASTM 90
Flue lining conforming to *Clay Flue Lining* ASTM

Mortar Proportions
Mortar shall be composed of one part portland cement and 4½ parts dry loose sand to which not be added not less than ½ part nor more than ¾ part lime dry to or hydrated lime or composed of one part plastic cement and three parts dry loose sand to which lime may be added not in excess of the volume of cement parts by reasonably accurate volume measurements.

Mixing of Mortar
All cementitious materials and aggregates shall be mixed for minimum period of three minutes, with the amount of water required to produce the desired workability

Re-tempering
Permitted only by adding water within a basin formed of mortar and the mortar mixed into the water Mortar which has become harsh and non-plastic shall not be re-tempered or used.

Grout
Grout may be composed of mortar retempered with water

Joints
All joints exposed to the weather shall be tooled
Joints in firebrick shall not exceed ¼"

Construction
When the bricks are being laid, they shall be sufficiently damp, and the mortar sufficiently soft, so that the mortar will possess plastic to permit the units to be levelled and plumbed immediately after being laid without leaving bond. All masonry work shall be accurately measured and in conformity with the plans. The brick less than ½ length shall be used in exposed work. Head and bed joints shall be solidly filled with mortar and brick shall be drawed into place.
Fireplaces are generally of two types. One type is constructed on concrete slab floors and the other type is constructed in frame floor using cantilevered hearth.
The generally accepted method of construction of fireplace base the hearth up is as follows: The fireplace is laid out, the back of the fireplace is constructed to ceiling height approximately five feet, and then the firebox is constructed and back filled with temporary mortar. Do not grout solidly behind firebox wall Brick usually behind firebox wall to allow for expansion of firebox.
The horizontal steel may be placed either in the mortar bed joint or in the grouted area.
Some fireboxes are constructed without the face, leaving the as the face may be added at later date while other fireboxes are constructed simultaneously with the face. Either way is an approved method of construction.
masonry chimney work temporal mortar grout shall fill the void between the flue lining and the masonry wall

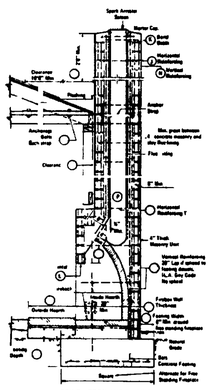

OCK F EBOX AND CH MNEY ON CONCRETE SLAB

ENERGY CONSERVATION EQUIREMENTS

Masonry and factory-built fireplaces shall meet the following requirements.

1. The audio opening of the firebox must be covered with light-fitting, closeable metal or glass door This requirement may be omitted if such doors would interfere with devices permanently installed in the fireplace which are designed to increase the circulation of heat.
2. The firebox must have an outside air intake which has minimum area of six square inches. This air intake must have tight-fitting damper (not the same as the flue damper) which is operable and readily accessible
   he flue damper must be tight-fitting with an accessible control
   Continuous burning gas pilot lights are prohibited
   The use of indoor air to cool the indoor when that indoor air is vented to the outside of the building is prohibited

CHIMNEY REINFORCEMEN

very chimney shall be reinforced with at least tou ¼ diameter vertical reinforcing bars. The bars shal extend the fu height of the chimney. The bars shall be tied horizontally at 18" intervals with not less than diameter shall be at each interval Two ties shall also be provided at the bend in bar where it changes from sloped position to vertical position Maximum slope of vertical steel should be 6" horizontal to " vertical

It is suggested that ties be also placed approximately 6" above and below another strap

Where the width of the chimney exceeds 48, two additional ¼ diameter vertical bars shall be provided for each additional flue incorporated into the chimney or for each additional 48" in width or fraction thereof

The above reinforcement requirement will be adequate for chimneys to ft above another tie

SMALL CHIMNEY ONE FLUE

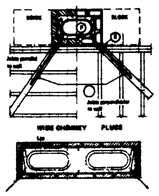

ANCHORAGE OF CHIMNEY TO BUILDING

is required by all codes to provide another stress from the chimney to the building when the chimney is outside the building and against the exterior wall. For residential also chimneys with one flue, small stoops approximately 3'10" 1 or standard HA chimney are included in the grout and around the reinforcing steel They are attached with 3/8" dia. bolts or 1-3/8" dia. 7" long screws to framing members. Bolts or lag screws used in all anchors must each be in separate holes.

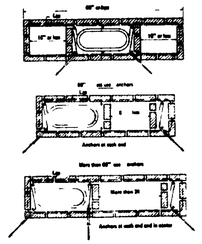

GAS LOG LIGHTER

Installation of gas log lighter should comply with local regulations for gas appliances.
The gas shut off valve should be an approved A.G.A. appliance and must be outside the masonry fireplace and not embedded in the outside hearth using joint consisting of at least three offsets should be installed between the gas shut off valve and the log lighter pipe. This is to prevent breaks in the joints in the event of movement or settlement of the fireplace.
It is recommended that the gas log lighter be " above the ash bed and definitely not buried in the ashes or in sand

FLUE AND CHIMNEY SIZES

Nominal Dimension of Flue Lining	Actual Outside Dimension of Flue Lining	Effective Flue Area	Max. Area of Fireplace Opening	Minimum Outside Dimension of Chimney
8½" Round	8½" Round	38 sq. in.	550 sq. in.	7" 7"
8½" 13" oval	8½ 13	43 sq. in.	615 sq. in.	7" 12"
8½" 13" oval	8½ 13	47 sq. in.	670 sq. in.	8" 12"
12" Round	12" Round	78 sq. in.	1300 sq. in.	8" 12"
12" 16" oval	12" 16"	75	1250 sq. in.	8" 12"
12" 17" oval	12"	82 sq. in.	1300 sq. in.	8" 12"
12" 17" oval	12½ 17½	84 sq. in.	1400 sq. in.	8" 12"
12" 17" oval	12½ 17	78 sq. in.	1300 sq. in.	8" 12"
12" 20" oval	12½ 20½	75	1250	8" 12"
12" 20" oval	12½ 21	2000 sq. in.	2000 sq. in.	8" 12"
12" 24" oval	12½ 24	2000 sq. in.	2000 sq. in.	8" 12"

FLUE SIZES

The area of the fireplace opening is multiplied by the flue area ratio to obtain the minimum required effective flue area.

The size of the modular flue lining selected should be equal to or larger than the required computed area

PROBLEM
Find proper flue size at / fireplace area for fireplace 48" wide by 30" high

SOLUTION
1. Find 48" fireplace width at bottom of chart
2. find 30" fireplace height at left side of chart
3. allow height line across and width line up until they intersect.

Proper flue size at be nearest curve above intersection Use 7" 7" or 2" nominal Flue lining size

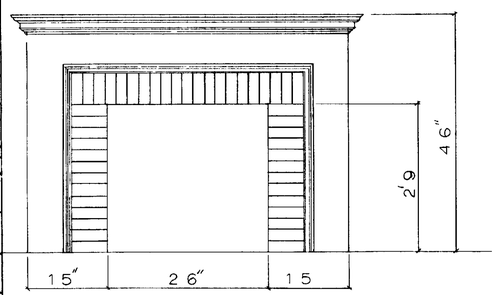

FIREPLACE ELEVATION
3/4" = 1-0"

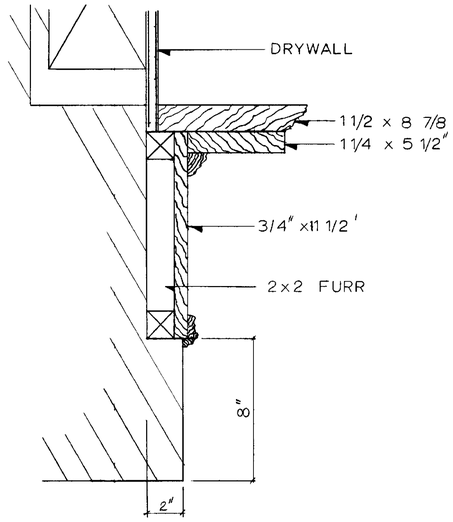

MANTEL DETAIL
3" = 1-0"

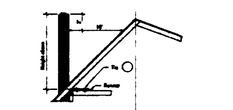

ANCHOR TI CONNECTION EQUIREMENTS FOR ALL CH MNEYS

Height of Chimney Above Roof	Spacing Between Anchors		Size of Anchor Bolts	Size of Anchor Straps
	Bolts Not Over 6" Apart	Straps Not Over 48" Apart		
10'	½ bolts	10d nails	2 ½ bolts 2-3/4" bolts	2-10d nails
10'	½" bolts	8-10d nails	2 ½ bolts 3 bolts	4-10d nails

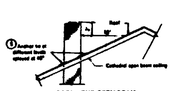

GABL END OPEN BEAM

ALT NATE FOUNDATION SCHEDUL FOR ONE STORS FREE STANDING FIREPLACE
(Roof Bearing 1000# psf mess.)

FIRE STANDING HEIGHT-FT	SQUARE FOOTING (ft²-inch)	CONTINUOUS FOOTING (ft²-inch)
10' and	4 6"	-24
12' and	4'	-28
14' and 15'	5'-6"	1-34
16' and 17	6'-6"	-38

Fireplace and chimney reinforcing and plates same as "minimum requirements the chart except as neither tie connections are required at roof or ceiling.

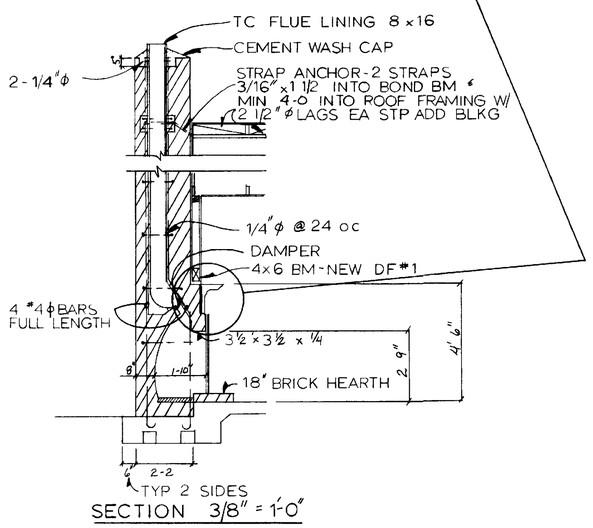

SECTION 3/8" = 1'-0"

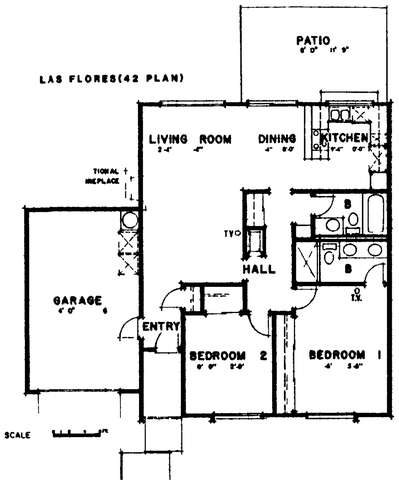

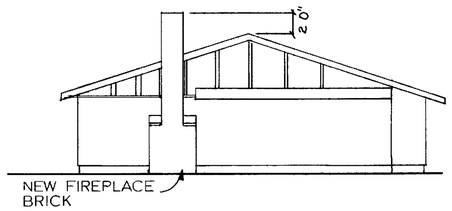

EXTERIOR ELEVATION
SCALE 1/8" = 1'-0"

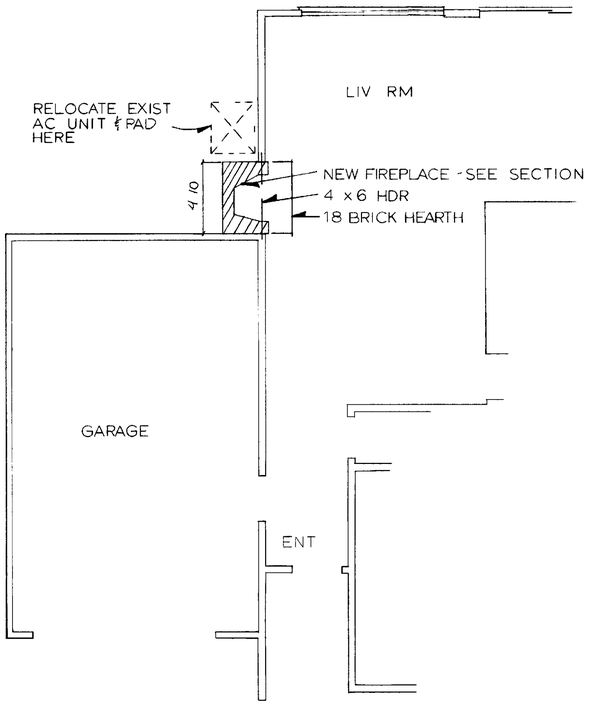

FLOOR PLAN
SCALE 1/4" = 1-0"

GENERAL CODE REQUIREMENTS

ITEM	Letter	Uniform Building Code 1979 & 1980 Edition	NA	Local Special Requirements
Hearth Slab Thickness		4"	4"	
Hearth Slab Width (Each side of opening)		12" Fireplace opg ≤ 6 sq. ft. 2" Fireplace opg > 6 sq. ft.	2"	
Hearth Slab Length (Front of opening)		20" Fireplace opg ≤ 6 sq. ft. 30" Fireplace opg > 6 sq. ft.	30"	
Hearth Slab Reinforcing		Reinforced to carry its own weight and all imposed loads.	Required if cantilevered to conventional with equal wood floor construction.	
Thickness of Wall of Firebox		10" common brick or 8" where firebrick lining is used. Min. to firebrick ½ stop	8" including minimum 2" firebrick lining. 2" when no lining is provided.	
Distance from top of Opening to Thimble		6"	6" min., 8" recommended.	
Smoke Chamber Edge of Shelf			offset.	
Rear Wall Thickness		6"	6" plus parging only if opposite a wall thickness is 8" or more if wall masonry. Form damper is required.	
Front Side wall Thickness		6"		
Chimney Vertical Reinforcing		Four full length bars for chimney up to 40" wide. Add two #4 bars for each additional 40" or fraction of width or each additional flue	Four #5 bars full length, no other splices added	
Horizontal Reinforcing		ties at 6" and two at each bend across steel	* bars at 24	
Bond Beams		No specified requirements L.A. City requirements are good practice	Type 1. bars at top bond beam 4 high. Type 2." bars + anchorage bond beam 8" high	
Fireplace Lintel		Noncombustible material	3½" 3", 3/16" angle with 3" and beams	
Walls with Flue Lining		Brick walls grout around lining 4" min. from outside flue lining to outside face of chimney	Brick walls grout around lining 4" min. from outside flue lining to outside face of chimney	
Walls with Unlined Flue		8" Solid masonry	8" Solid masonry	
Exterior Stucco Adjacent Flue		4" stucco for brick	4" stucco for brick	
Minimum Flue Area (Based on Area of Fireplace Opening)		Round lining-1/10 or 35 sq.in.min. Rectangular lining 1/10 or 35 sq. in min. Unlined or lined with firebrick 1/8 or 165 sq. inch.	1/10 for chimneys over 5' high and over 165 for chimneys less than 5 high	
Clearance Wood Frame Combustible Material		2" when outside of wall or ½" plaster board 4" when directly within structure 6" wide to fireplace opening 2" from opening when mineral pro board more than 1/8 for in. 2" or 1/2"	½" from exterior floor or roof sheathing 2" from framing members 36" or edge of fireplace 12" from opening when projecting more than 1/8 for in.	
Above Roof		3/16" 1"	1/4"	
Anchorage Steel Chimney Attach to Bolts		2" bolted around outer bar with" long Two ½" Dia.	1/4" bolted around outer bar 3" long Two ½" Dia.	
Clearance Fireplace		2" min.	2" min. for stucco chimneys 3" min. for 2 story chimneys 2" min. side of fireplace wall	
Clean Out		6" wide side of fireplace wall		
Screen for Smoke		Optional	Required	Yes, in addition also California Energy Conservation Requirements
Glass Screen Door		Optional	Required but shall not interfere with energy conservation improving devices	Required but shall not interfere with energy conservation improving devices

Additional Los Angeles County and Los Angeles requirements.

* NOTE: Chimneys constructed of hollow masonry units may have vertical reinforcing bars placed in footing dowels, provided that the spliced is supplemented by providing 10' dia. wall.

1 **GENERAL NOTES**

Thes drawing and pecification and opi the sof ar l g l i strument of ervice for u f th owner

Profes ional Community Management
P O Box 222
Laguna Hill CA 26
(Ser fter known as P .M)

Agent for Leisur World Laguna Hill California and authorized repr sentative on the designated property only and repai th sol property f the designer Unauthorized use is prohibited

1 **County Street Address:**

_____

_____

Tract No. . Lot No.

Insurance: Cert in insurance(s) are required as outlined by the P .M Permits nd Inspection Department Should they request such insuranc the policl must be taken out i owner nas

1 **Guarantees, warranties, etc:** The work of each trade shall be gu rantced by contract r

Cutting, patching, etc: Each trade shall at all times do their own cutting patching fitting etc To make several parts come together properly fit and to receive or t be received by the work f other trade

1 6 **Clean-Up:** All trade shall t all times keep the premies free from accumulation of wa t material or rubbish caused by their work Contractor i responsibl fer removal of debris and nonsa material and must leave work rea broom lean both daily and upon completion f work Use of community dumpster i not permitted

1 8 **Codes:** All work shall comply with the current edition of the Uniform Building Code state nd local code

1 9 **General Notes:** Each trade hall be held responsibl fer knowledge f general not s listed her i or elsewhere within the drawings

1 **Fees:** All permits and plan check fee shall be taken out and paid for by the resident and/or his contractor

1 1 **Interpretation:** t is imperative hat th contractor verify all dimen ions and condition hown on th drawings t the job sit prior to comm ncing constructio nd i f rn the P C Permits nd Inspections Department f ny dis repanci conflict or omis ions befor beginning/proceeding with th work

2 **Dimensions:** Dimen ions have precedenc over scale

1 13 **Manufacturer's Directions:** Where manufacturer directions/specifi tions ar called for they shall be considered as part f thes drawings

Construction Regulations: The drawings nd work performed shall at ll time be governed by the pplicabl provision f federal tat and local laws

Facilities: Temporary toilet shall be provided per local authorities

Barricades: Con truction barricades if required shall conform t th requirement of local uthoritie For safety th publi shall be protected and/ r shielded from the construction work/site t ll times during the contract

17 **Structure:** The structure i designed stable unit after all component parts re i place Therefor contractor shall provide all shoring nd bracing required to insure the stability and/or ll part during construction

18 **Standards:** All work shall be performed to the best standard practice f the trade( ) All contractor damaged work shall be replaced t the contracto xpense

9 **Construction Materials:** All materi l hall be f standard grade or better unless otherwise noted

Discrepancies: Any discrepancies between plans building nd local ode requirements that may ffect the installation fabrication or overall work in ny way shall be immediately brought to the ttention f P M Permit and Inspections Department by th contractor

21 **Work Hours:** No work shall commenc prior to 8 a m and no work will be permitted fter p m Monday through Friday Saturday work hould be held t a mi imum nd no work whatsoever n Sunday

REMOVE A

FIREPLACE ADDITION	123
42 PLAN	
DRAWN BY: CHRIS GUIDRY	
CHECKED BY SAM CROSLAND	
DATE (3/10/89) 8/18/93	

Professional Community Management
LE SURE WO LD — LAGUN H LLS
PERMITS & INSPECTIONS DEPARTMENT